Automation for a Changing World

Delta EtherCAT Interface Servo Drive

ASDA-A2-E Series

EtherCAT®

www.deltaww.com

DELTA

Smarter. Greener. Together.

Introduction

Delta's ASDA-A2-E, an advanced AC Servo Drive with an EtherCAT communication interface, complies with IEC61158 and IEC61800-7 to enable faster, real-time, and accurate performance in high-end applications.

The ASDA-A2-E follows in the footsteps of the successful ASDA-A2 series. This advanced A2-E supports all the modes of the CoE device profile based on CiA402, and all command types of EtherCAT.

In addition to the EtherCAT communication function, the A2-E features the integrated Safe Torque Off (STO), short cycle time, and extension digital input port, which makes the A2-E ideal for multi-axis synchronization applications in a wide range of machinery automation fields. This series covers a wide range of rated power to drive the motors, from 400 W to 7.5 kW for 400 V and 100 W to 3 kW for 220 V.

Features

- Touch probe function can be enabled with dedicated Digital Input (DI) on CN7 or the external encoder.
- Integrated Safe Torque Off (STO) safety function according to the standards of IEC61508, SIL2 ; IEC62061, SILCL2 ; ISO13849-1, Cat. 3 PL=d
- Wide power range coverage in both 220 V and 400 V
- Supports full-closed loop control
- Supports absolute type and incremental type ECMA series motors

Applications

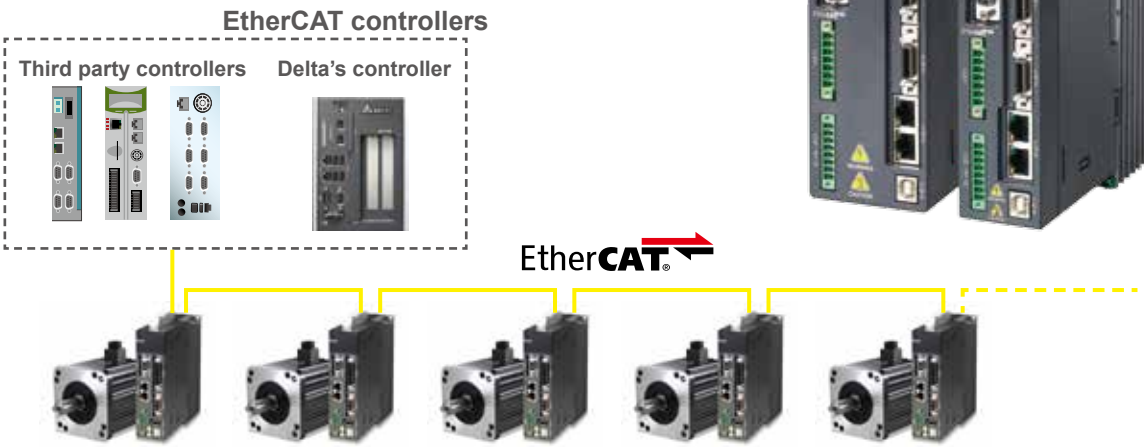

Specifications of ASDA-A2-E_220V Series

ASDA-A2-E Series		100W	200W	400W	750W	1kW	1.5kW	2kW	3kW
		01	02	04	07	10	15	20	30
Power Supply	Phase / Voltage	Three-phase / Single-phase 220 V_{AC}						Three-phase 220 V_{AC}	
	Permissible Voltage Range	Three-phase / Single-phase 200 ~ 230 V_{AC} , -15%~10%						Three-phase 200 ~ 230 V_{AC} , -15% ~ 10%	
Input Current (3PH) Unit: Arms		0.39	1.11	1.86	3.66	4.68	5.9	8.76	9.83
Input Current (1PH) Unit: Arms		0.69	1.92	3.22	6.78	8.88	10.3	-	-
Continuous Output Current Unit: Arms		0.9	1.55	2.6	5.1	7.3	8.3	13.4	19.4
Cooling Method		Natural Air Circulation			Fan Cooling				
Encoder Resolution (Servo Drive Resolution)		Incremental type: 20-bit ; Absolute type: 17-bit							
Control of Main Circuit		SVPWM (Space Vector Pulse Width Modulation) Control							
Tuning Modes		Auto / Manual							
Dynamic Brake		no		Built-in					
Position Control Mode (CSP)	Command Source	External analog signal							
	Smoothing Strategy	Low-pass and P-curve filter							
	Electronic Gear	Electronic gear N/M multiple N: 1 ~ 32767, M: 1 : 32767 (1/50 < N/M < 25600)							
	Torque Limit Operation	External analog signal							
	Feed Forward Compensation	External analog signal / Internal parameters							
Speed Control Mode (CSV)	Speed Control Range[*1]	1:5000						1:3000	
	Command Source External Analog Signal	External analog signal							
	Smoothing Strategy	Low-pass and S-curve filter							
	Torque Limit Operation	Set by parameters or via analog input							
	Frequency Response Characteristic	Maximum 1 kHz							
	Speed Accuracy (at rated rotation speed)[*2]	0.01 % or less at 0 to 100 % load fluctuation							
		0.01 % or less at 0℃ to 50℃ ambient temperature fluctuation							
	Feed Forward Compensation	0.01 % or less at ±10 % power fluctuation							
Torque Control Mode (CST)	Command Source	External analog signal							
	Smoothing Strategy	Low-pass filter							
	Speed Limit Operation	Via analog input							
Digital Inputs/ Outputs	Inputs	Servo on, Reset, Gain switching, Pulse clear, Zero speed CLAMP, Command input reverse control, Command triggered, Speed/Torque limit enabled, Position command selection, Motor stop, Speed position selection, Position / Speed mode switching, Speed / Torque mode switching, Torque / Position mode switching, PT / PR command switching, Emergency stop, Forward / Reverse inhibit limit, Reference “Home” sensor, Forward / Reverse operation torque limit, Move to “Home”, Electronic Cam (E-Cam), Forward / Reverse JOG input, Event trigger PR command, Electronic gear ratio (Numerator) selection and Pulse inhibit input							
	Outputs	Encoder signal output (A, B, Z Line Driver and Z Open Collector)							
		Servo ready, Servo on, At Zero speed, At Speed reached, At Positioning completed, At Torques limit, Servo alarm (Servo fault) activated, Electromagnetic brake control, Homing completed, Output overload warning, Servo warning activated, Position command overflow, Forward / Reverse software limit, Internal position command completed, Capture operation completed output., Motion control completed output., Master position of E-Cam (Electronic Cam)							
Protective Functions		Overcurrent, Overvoltage, Undervoltage, Motor overheated, Regeneration error, Overload, Overspeed, Abnormal pulse control command, Excessive deviation, Encoder error, Adjustment error, Emergency stop activated, Reverse/ Forward limit switch error, Position excessive deviation of full-close control loop, Serial communication error, Input power phase loss, Serial communication time out, short circuit protection of U, V, W, and CN1, CN2, CN3 terminals							
Communication Interface		USB / EtherCAT							
Environment	Installation Site	Indoor location (free from direct sunlight), no corrosive liquid and gas (far away from oil mist, flammable gas, dust)							
	Altitude	Altitude 1000 m or lower above sea level							
	Atmospheric Pressure	86kPa ~ 106kPa							
	Operating Temperature	0℃ ~ 55℃ (If operating temperature is above 45℃ , forced cooling will be required)							
	Storage Temperature	-20℃ ~ 65℃							
	Humidity	0 ~ 90% RH (non-condensing)							
	Vibration	9.80665 m/s^2 (1 G) less than 20 Hz, 5.88 m/s^2 (0.6 G) 20 to 50 Hz							
	IP Rating	IP20							
	Power System	TN System[*3]							
	Approvals	IEC/EN 61800-5-1, UL 508C, C-tick							

Footnote:

*1 Rated rotation speed: When full load, speed ratio is defined as the minimum speed (the motor will not pause).

*2 When command is rated rotation speed, the speed fluctuation rate is defined as: (Empty load rotation speed – Full load rotation speed) / Rated rotation speed

*3 TN system: A power distribution system having one point directly earthed, the exposed conductive parts of the installation being connected to that point by a protective earth conductor.

Specifications of ASDA-A2-E_400 V Series

ASDA-A2-E Series		400 W	750 W	1 kW	1.5 kW	2 kW	3 kW	4.5 kW	5.5 kW	7.5 kW
		04	07	10	15	20	30	45	55	75
Power Supply	Input Voltage	24 V_{DC}, ±10%								
	Input Current	0.43 A				1.18 A			1.66 A	
	Input Power	10.32 W				28.2 W			39.85 W	
Main Circuit Power	Permissible Voltage Range	Three-phase, 380~480 V_{AC}, ±10%								
	Input Current Unit: Arms	1.40	2.35	3.02	4.24	5.65	8.01	11.9	14.1	17.27
	Continuous Output Current Unit: Arms	2.0	3.35	3.52	5.02	6.66	11.9	20	22.37	30
Cooling Method		Fan Cooling								
Encoder Resolution (Servo Drive Resolution)		Incremental type: 20-bit ; Absolute type: 17-bit								
Control of Main Circuit		SVPWM (Space Vector Pulse Width Modulation) Control								
Tuning Modes		Auto / Manual								
Dynamic Brake		Built-in				no				
Position Control Mode (CSP)	Command Source	External analog signal								
	Smoothing Strategy	Low-pass and P-curve filter								
	Electronic Gear	Electronic gear N/M multiple N: 1 ~ 32767, M: 1 : 32767 (1/50 < N/M < 25600)								
	Torque Limit Operation	External analog signal								
	Feed Forward Compensation	External analog signal / Internal parameters								
Speed Control Mode (CSV)	Speed Control Range*1	1:5000							1:3000	
	Command Source External Analog Signal	External analog signal								
	Smoothing Strategy	Low-pass and S-curve filter								
	Torque Limit Operation	Set by parameters or via analog input								
	Frequency Response Characteristic	Maximum 1 kHz								
	Speed Accuracy (at rated rotation speed)*2	0.01 % or less at 0 to 100 % load fluctuation								
		0.01 % or less at 0℃ to 50℃ ambient temperature fluctuation								
	Feed Forward Compensation	0.01 % or less at ±10 % power fluctuation								
Torque Control Mode (CST)	Command Source	External analog signal								
	Smoothing Strategy	Low-pass filter								
	Speed Limit Operation	Via analog input								
Digital Inputs/ Outputs	Inputs	Servo on, Reset, Gain switching, Pulse clear, Zero speed CLAMP, Command input reverse control, Command triggered, Speed/Torque limit enabled, Position command selection, Motor stop, Speed position selection, Position / Speed mode switching, Speed / Torque mode switching, Torque / Position mode switching, PT / PR command switching, Emergency stop, Forward / Reverse inhibit limit, Reference “Home” sensor, Forward / Reverse operation torque limit, Move to “Home”, Electronic Cam (E-Cam), Forward / Reverse JOG input, Event trigger PR command, Electronic gear ratio (Numerator) selection and Pulse inhibit input								
	Outputs	Encoder signal output (A, B, Z Line Driver and Z Open Collector)								
		Servo ready, Servo on, At Zero speed, At Speed reached, At Positioning completed, At Torques limit, Servo alarm (Servo fault) activated, Electromagnetic brake control, Homing completed, Output overload warning, Servo warning activated, Position command overflow, Forward / Reverse software limit, Internal position command completed, Capture operation completed output., Motion control completed output., Master position of E-Cam (Electronic Cam)								
Protective Functions		Overcurrent, Overvoltage, Undervoltage, Motor overheated, Regeneration error, Overload, Overspeed, Abnormal pulse control command, Excessive deviation, Encoder error, Adjustment error, Emergency stop activated, Reverse/ Forward limit switch error, Position excessive deviation of full-close control loop, Serial communication error, Input power phase loss, Serial communication time out, short circuit protection of U, V, W, and CN1, CN2, CN3 terminals								
Communication Interface		USB / EtherCAT								
Environment	Installation Site	Indoor location (free from direct sunlight), no corrosive liquid and gas (far away from oil mist, flammable gas, dust)								
	Altitude	Ititude 1000 m or lower above sea level								
	Atmospheric Pressure	86 kPa ~ 106 kPa								
	Operating Temperature	0℃ ~ 55℃ (If operating temperature is above 45℃ , forced cooling will be required)								
	Storage Temperature	-20℃ ~ 65℃								
	Humidity	0 ~ 90% RH (non-condensing)								
	Vibration	9.80665 m/s^2 (1 G) less than 20 Hz, 5.88 m/s^2 (0.6 G) 20 to 50 Hz								
	IP Rating	IP 20								
	Power System	TN System*3								
	Approvals	IEC/EN 61800-5-1, UL 508C, C-tick								

Footnote:
*1 Rated rotation speed: When full load, speed ratio is defined as the minimum speed (the motor will not pause).
*2 When command is rated rotation speed, the speed fluctuation rate is defined as: (Empty load rotation speed – Full load rotation speed) / Rated rotation speed
*3 TN system: A power distribution system having one point directly earthed, the exposed conductive parts of the installation being connected to that point by a protective earth conductor.

EtherCAT Communication Mode

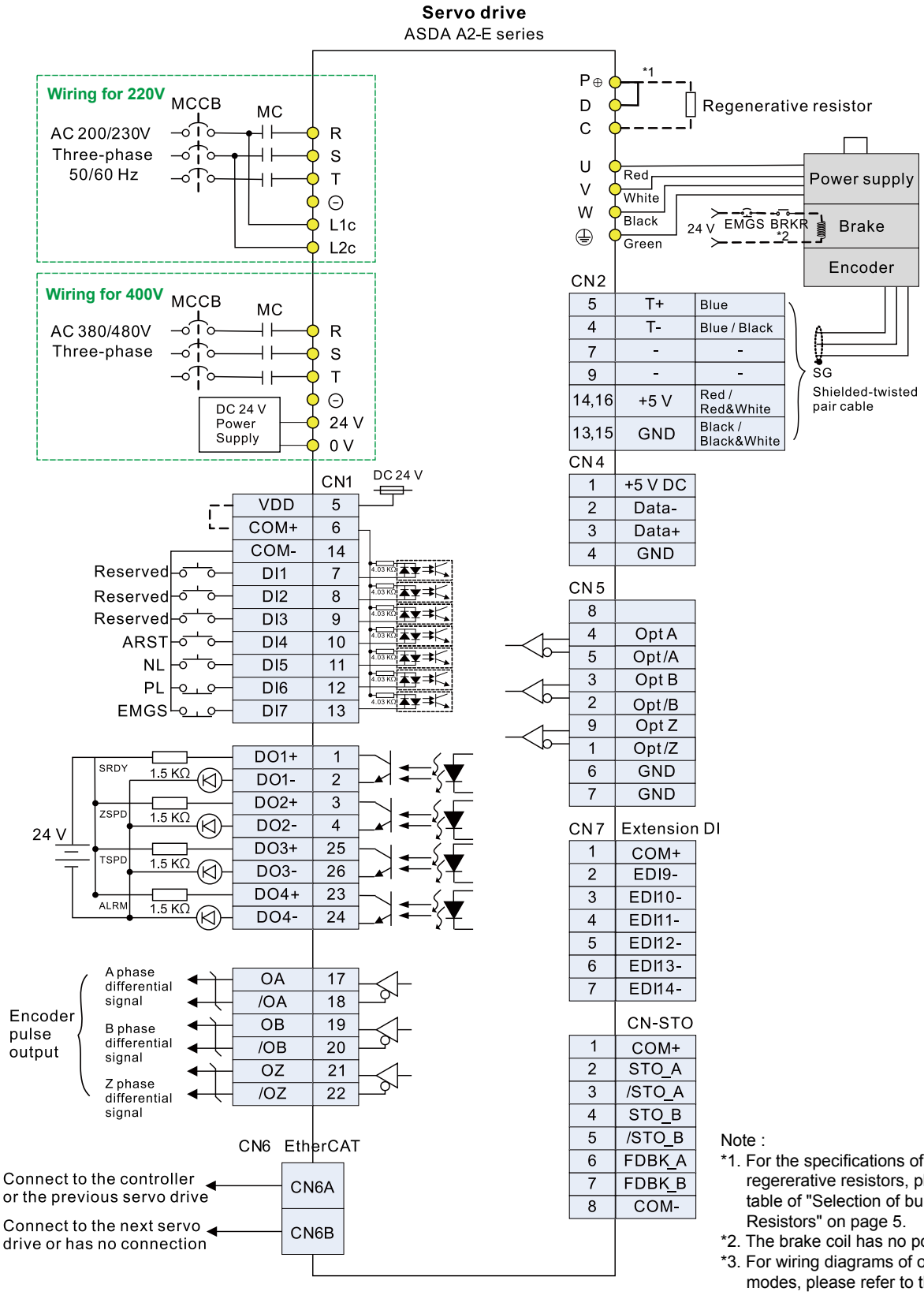

Note :

*1. For the specifications of built-in regererative resistors, please refer to the table of "Selection of built-in Regenerative Resistors" on page 5.

*2. The brake coil has no polarity.

*3. For wiring diagrams of other control modes, please refer to the user manual of Delta's ASDA-A2-E.

Communication Specifications

Physical Layer	IEEE802.3u (100 BASE-TX)
Data Link Layer	APRD, FPRD, BRD, LRD, APWR, FPWR, BWR, LWR, ARMW, FRMW, APRW, FPRW, BRW, LRW
Device Profile (CiA402)	Homing Mode, Profile Position Mode, Profile Velocity Mode, Profile Torque Mode, Interpolated Position Mode, Cyclic Syn. Position Mode, Cyclic Syn. Velocity Mode, Cyclic Syn. Torque Mode, Touch Probe Function, Torque Limit Function
Process Data Size	Tx: 8 Object (32 byte, Max.); Rx: 8 Object (32 byte, Max.) Dynamic Mapping supported.
Bus Clock	DC cycle with min. 250 us*
LED Indicator	EtherCAT Link/Activity Indicator (L/A) x 2 EtherCAT RUN Indicator (RUN) x 1 EtherCAT ERROR Indicator (ERR) x 1

* This function will be available in a new version soon to come.

Selection of Built-in Regenerative Resistors

220 V Series									
Servo Drive (kW)	100 W	200 W	400 W	750 W	1.0 kW	1.5 kW	2.0 kW	3.0 kW	
Specification of Built-in Regenerative Resistor	NA	NA	40 W 40 ohm	60 W 40 ohm	60 W 40 ohm	60 W 40 ohm	100 W 20 ohm	100 W 20 ohm	
400 V Series									
Servo Drive (kW)	400 W	750 W	1.0 kW	1.5 kW	2.0 kW	3.0 kW	4.5 kW	5.5 kW	7.5 kW
Specification of Built-in Regenerative Resistor	40 W 80 ohm	40 W 80 ohm	40 W 80 ohm	40 W 80 ohm	NA	NA	NA	NA	NA

Part Names and Functions

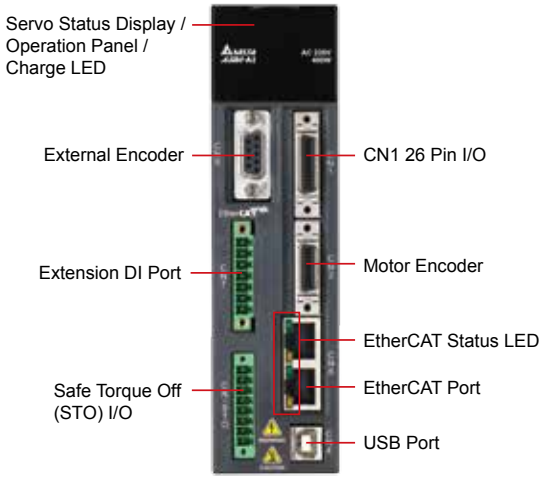

Ordering Information

ASD - A2 - 04 21 - E

- **ASD** — **Product Name:** AC Servo Drive
- **A2** — **Series**: A2
- **04** — **Rated Output Power**
  - 01: 100 W
  - 02: 200 W
  - 04: 400 W
  - 07: 750 W
  - 10: 1 kW
  - 15: 1.5 kW
  - 20: 2 kW
  - 30: 3 kW
  - 45: 4.5 kW
  - 55: 5.5 kW
- **21** — **Input Voltage and Phase**
  - 21: 220 V 1-phase / 3-phase
  - 23: 220 V 3-phase
  - 43: 400 V 3-phase
- **E** — **EtherCAT model**

Accessories for ASDA-A2-E

Part Number	ASD-CNSC0026
Description	CN1 connector

Part Number	ASD-CNFS0808
Description	Pack of connectors used for STO wiring, 8 pcs of connectors in one pack

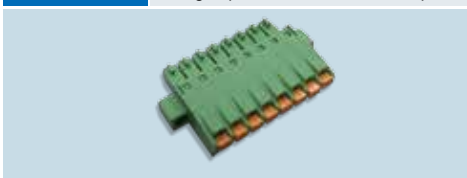

Note :
For other accessories, please refer to Delta's ASDA-A2 product catalogue.

Dimensions

▶ 220 V Series

100 W / 200 W / 400 W

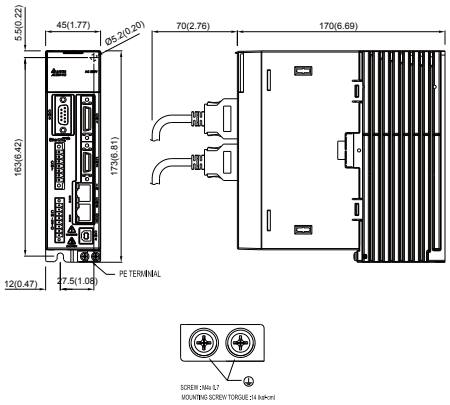

Weight	1.5 (3.3)

Weight

750 W / 1 kW / 1.5 kW

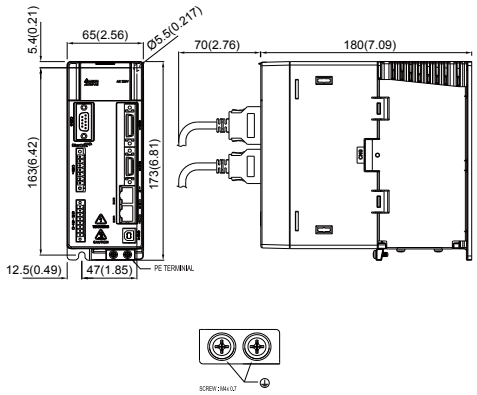

Weight	2.0 (4.4)

2 kW / 3 kW

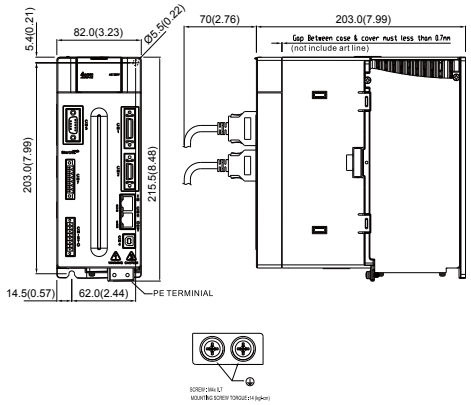

Weight	2.89 (6.36)

▶ 400 V Series

400 W / 750 W / 1 kW / 1.5 kW

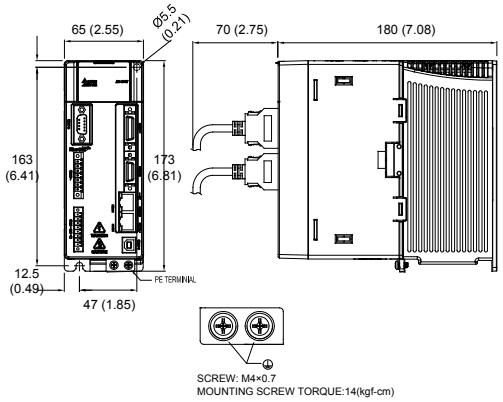

Weight	2.0 (4.4)

2 kW / 3 kW / 4.5 kW / 5.5 kW

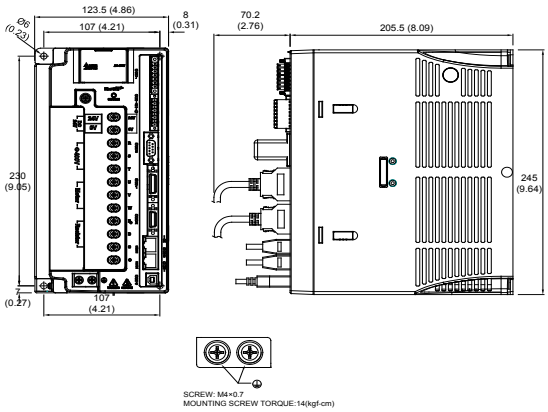

Weight	4.6 (10.1)

7.5 kW

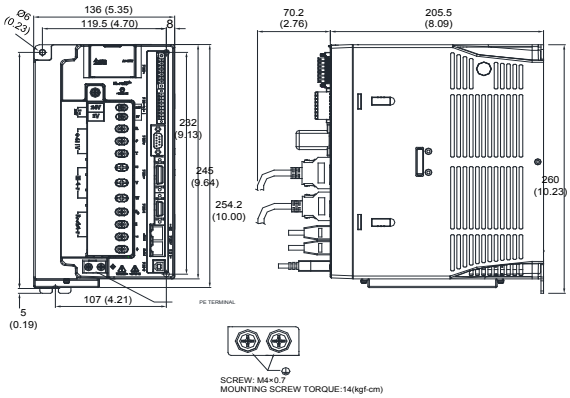

Weight	5.5 (12.1)

Footnote:
1. Dimensions are in millimeters (inches); Weights are in kilograms (kg) and pounds (lbs)
2. Dimensions and weights of the servo drive may be revised without prior notice.

Smarter. Greener. Together.

Industrial Automation Headquarters

Delta Electronics, Inc.
Taoyuan Technology Center
18 Xinglong Road, Taoyuan District,
Taoyuan City 33068, Taiwan (R.O.C.)
TEL: 886-3-362-6301 / FAX: 886-3-371-6301

Asia

Delta Electronics (Jiangsu) Ltd.
Wujiang Plant 3
1688 Jiangxing East Road,
Wujiang Economic Development Zone
Wujiang City, Jiang Su Province, P.R.C. 215200
TEL: 86-512-6340-3008 / FAX: 86-769-6340-7290

Delta Greentech (China) Co., Ltd.
238 Min-Xia Road, Pudong District,
ShangHai, P.R.C. 201209
TEL: 86-21-58635678 / FAX: 86-21-58630003

Delta Electronics (Japan), Inc.
Tokyo Office
2-1-14 Minato-ku Shibadaimon,
Tokyo 105-0012, Japan
TEL: 81-3-5733-1111 / FAX: 81-3-5733-1211

Delta Electronics (Korea), Inc.
1511, Byucksan Digital Valley 6-cha, Gasan-dong,
Geumcheon-gu, Seoul, Korea, 153-704
TEL: 82-2-515-5303 / FAX: 82-2-515-5302

Delta Electronics Int'l (S) Pte Ltd.
4 Kaki Bukit Ave 1, #05-05, Singapore 417939
TEL: 65-6747-5155 / FAX: 65-6744-9228

Delta Electronics (India) Pvt. Ltd.
Plot No 43 Sector 35, HSIIDC
Gurgaon, PIN 122001, Haryana, India
TEL : 91-124-4874900 / FAX : 91-124-4874945

Americas

Delta Products Corporation (USA)
Raleigh Office
P.O. Box 12173,5101 Davis Drive,
Research Triangle Park, NC 27709, U.S.A.
TEL: 1-919-767-3800 / FAX: 1-919-767-8080

Delta Greentech (Brasil) S.A.
Sao Paulo Office
Rua Itapeva, 26 - 3° andar Edificio Itapeva One-Bela Vista
01332-000-São Paulo-SP-Brazil
TEL: 55 11 3568-3855 / FAX: 55 11 3568-3865

Europe

Delta Electronics (Netherlands) B.V.
Eindhoven Office
De Witbogt 20, 5652 AG Eindhoven, The Netherlands
TEL: +31 (0)40-8003800 / FAX: +31 (0)40-8003898

*We reserve the right to change the information in this catalogue without prior notice.

DELTA_IA-ASDA_ASDA-A2-E_C_EN_20160303